Chaffoteaux

SPARE PARTS EXPLODED VIEW
GAS WALL BOILERS

Model

PRIMAXIA

R8202647-08 - 26/03/2012

EN	FR	IT	ES	DE

PRIMAXIA

Domestic Gas Boilers

Col	Reference	Model type	Begin	End
1	200006774031	PRIMAXIA 24 CF N	03/03	03/08
2	200006774036	PRIMAXIA 24 VMC N	03/03	03/08
3	200006774037	PRIMAXIA 24 FF N	03/03	03/08

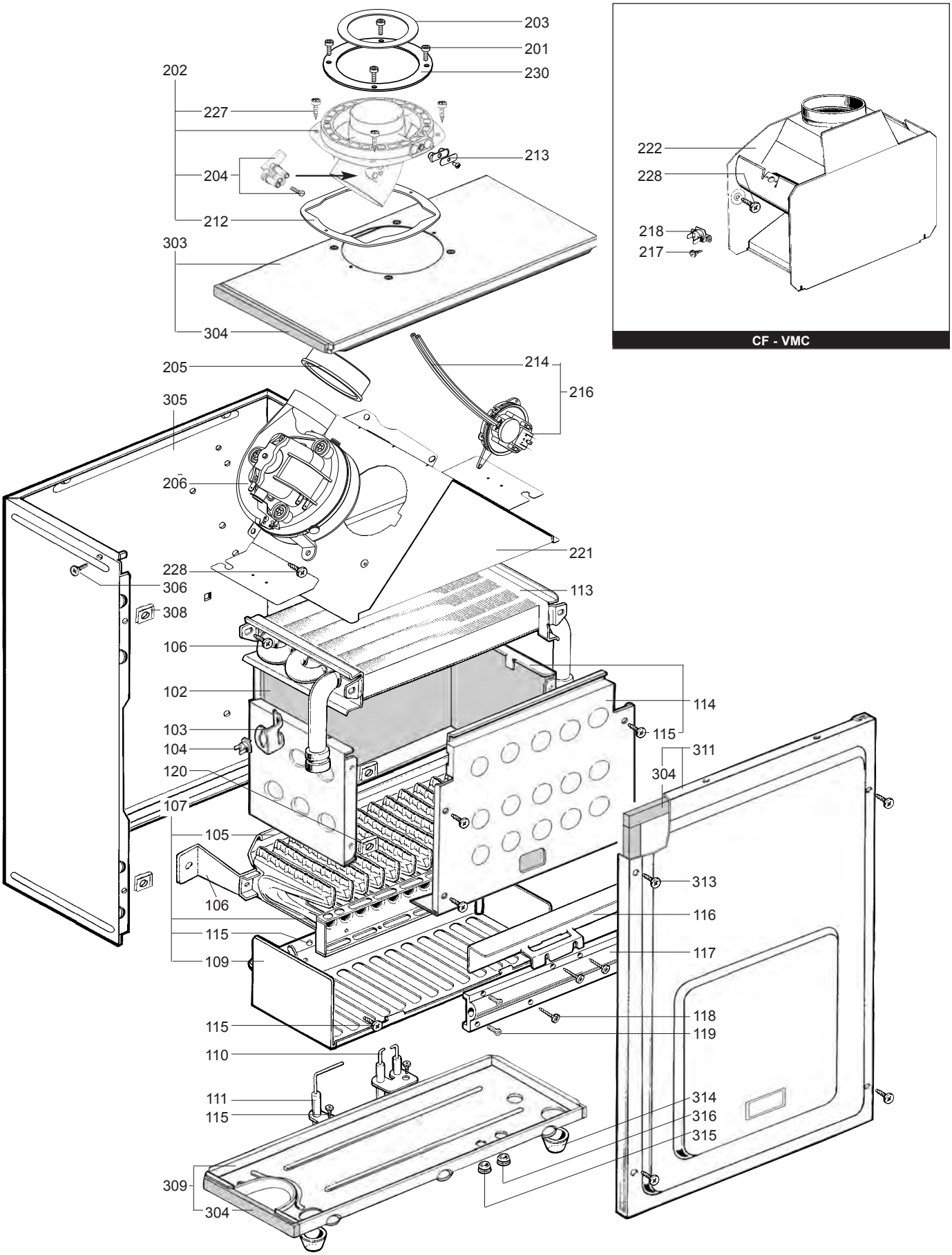
203
201
230
202
227
213
204
212
303
304
205
214
216
305
206
221
228
306
113
308
106
102
114
103
115
104
311
120
304
107
105
313
106
116
115
117
109
118
115
119
110
111
314
115
316
315
309
304
222
228
218
217
CF - VMC

R8207346

	Description	Manf. Pt. N	Type	PRIMAXIA 24 CF	PRIMAXIA 24 VMC	PRIMAXIA 24 FF	4	5	6	7	8	9	10	11	12	13	14	15	16	17	18	31	
0100	**BURNER ASSEMBLY**																						
0102	COMBUSTION CHAMBER LINING KIT	60081722		●	●	●																	
0103	CLIP	61010050		●	●	●																	
0104	OVERHEAT THERMOSTAT 105C	61303566		●	●	●																	
0105	CROSS LIGHTING STRIP	61002811				●																	
	CROSS LIGHTING STRIP	61010038		●	●																		
0106	TAPPING SCREW CBLSX D: 6.3-13	61010648		●	●	●																	
0107	BURNER HEAD	61010415		●	●																		
	BURNER HEAD	61010753				●																	
0109	GRILLE	61010223				●																	
	DEFLECTOR	61303084		●	●																		
0110	IGNITION ELECTRODE	61002801		●	●	●																	
0111	IONIZATION ELECTRODE	61002802		●	●	●																	
0113	HEAT EXCHANGER	61010017		●	●	●																	
0114	COMBUSTION CHAMBER ASSY	60081721		●	●	●																	
0115	TAPPING SCREW CBLSX D: 4.2-9.5	61010125		●	●	●																	
0116	DEFLECTOR	61010392				●																	
0117	MANIFOLD 16 INJ.	61010030	NAT	●	●																		
	MANIFOLD 16 INJ.	61010341	NAT			●																	
0118	TAPPING SCREW CBLSX D: 4.2-25	61010128		●	●	●																	
0119	SCREW HX M 5-12	61010131		●	●	●																	
0120	SPIRE CLIP	60057488		●	●	●																	
0200	**FAN ASSEMBLY**																						
0201	SCREW CLX M 5-20	61017600				●																	
0202	FLUE CONNECTION	60000735				●																11/04	
	FLUE CONNECTION	61306695				●																	10/04
0203	RESTRICTOR D:61 KIT	60000736				●																	10/04
	RESTRICTOR D:65 KIT	60000737				●																11/04	
0204	VENTURI	61310050				●																	
0205	GASKET	61303825				●																	
0206	FAN ASSY	61304720				●																	
0212	GASKET	61300262				●																	
0213	PLUG KIT	61306698				●																	
0214	SILICONE TUBE D: 9x3 L: 1.30M	60081265				●																	
0216	AIR PRESSURE SWITCH 24KW	61306697				●																	
0217	SHEET SCREW CBLX D: 3.5-6.5	61010126		●	●																		
0218	THERMOSTAT (SAFETY - 70C)	61012479		●																			
	OVERHEAT THERMOSTAT 49C	61310767			●																		
0221	HOOD	61304712				●																	
0222	DRAUGHT DIVERTER	61010117		●																			
	DRAUGHT DIVERTER	61308490			●																		
0227	TAPPING SCREW CBLSX D:4.2-12.5	61010847				●																	
0228	TAPPING SCREW CBLSX D: 6.3-13	61010648		●	●	●																	
0230	GASKET (/ Flue bend turret)	61300258				●																	
0300	**SEALED CASE**																						
0303	TOP PANEL BOX	61305438				●																	
0304	FOAM SEAL 12.5x5 L: 2.5M	60081273				●																	
0305	CASE	61010106				●																	
0306	TAPPING SCREW CBLZ D: 4.2-13	60079486				●																	
0308	SPIRE CLIP	60057488				●																	
0309	BASE - BOX	61010588				●																	
0311	CASE COVER	60081851				●																	
0313	TAPPING SCREW CBLZ D: 4.2-19	61003114				●																	
0314	GROMMET	61010109				●																	
0315	GROMMET	60039017				●																	
0316	GROMMET - DOUBLE	60042707				●																	

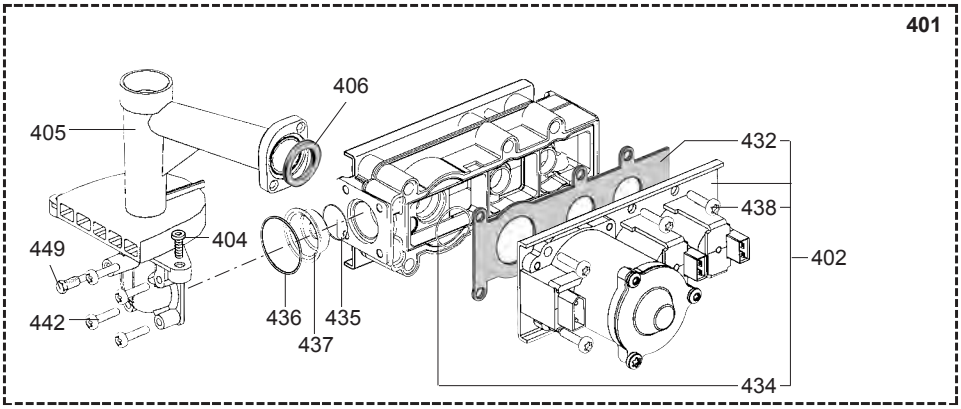
401
406
405
432
438
404
449
402
442
436
435
437
434

	Description	Manf. Pt. N	Type	PRIMAXIA 24 CF	PRIMAXIA 24 VMC	PRIMAXIA 24 FF	4	5	6	7	8	9	10	11	12	13	14	15	16	17	18	31	
0400	**GAS SECTION**																						
0401	GAS VALVE NAT	61013015	NAT			●																	
	GAS VALVE NAT	61304994	NAT	●	●																		
0402	SOLENOID VALVES KIT NAT	60081859	NAT	●	●	●																	
0404	SCREW HX M 5-12	61010131		●	●	●																	
0405	BURNER BASE KIT	60081835		●	●	●																	
0406	GASKET (/Manifold)	61010071		●	●	●																	
0410	FOAM SEAL 12x7 L: 5M	60081273-04		●	●	●																	
0412	GAS SECTION GASKETS KIT	60081837		●	●	●																	
0432	GASKET (/Solenoid valve)	61013018		●	●	●																	
0434	O-RING D: 14.1-1.6	60021061-41		●	●	●																	
0435	O-RING D: 17.1-1.6	60021061-42		●	●	●																	
0436	O-RING D: 22-2.6	60021061-40		●	●	●																	
0437	RESTRICTOR D: 6.7	61013016-01	NAT			●																	
	RESTRICTOR D: 8.0	61013016-08	NAT	●	●																		
0438	SCREW CLXS M 5-45	61014414		●	●	●																	
0442	SCREW CBLXS M 4-20	61014415		●	●	●																	
0449	PRESSURE TEST POINT SCREW	61016378		●	●	●																	

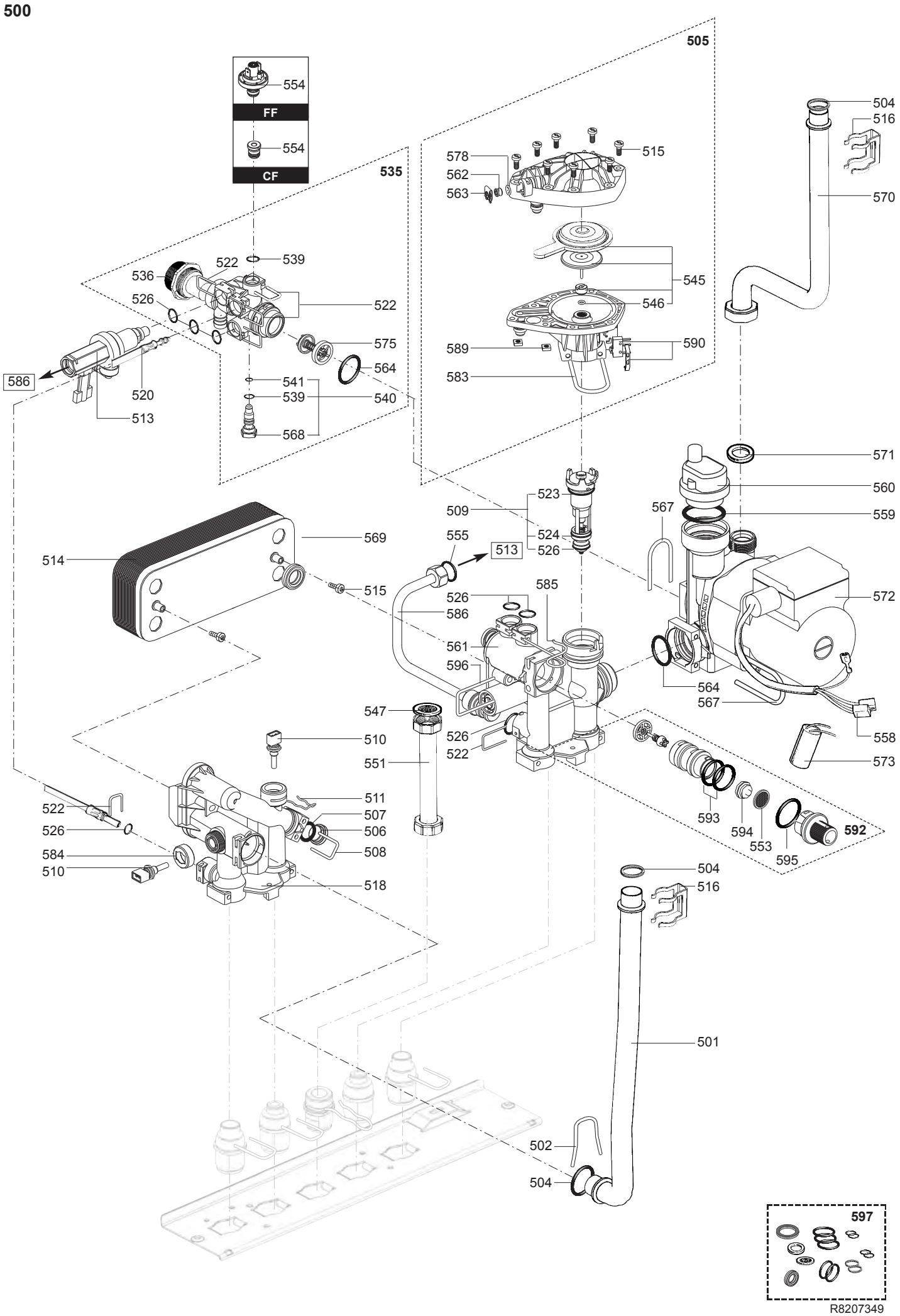
500
505
535
FF
CF
554
554
504
516
570
578
562
563
515
539
522
536
526
522
545
546
575
564
589
590
583
586
520
513
541
539
540
568
571
560
559
567
523
509
524
526
555
513
569
514
515
585
526
586
572
561
596
564
567
547
510
551
526
522
558
573
511
507
506
508
522
526
584
510
518
593
594
553
595
592
504
516
501
502
504
597
R8207349

	Description	Manf. Pt. N	Type	PRIMAXIA 24 CF	PRIMAXIA 24 VMC	PRIMAXIA 24 FF	4	5	6	7	8	9	10	11	12	13	14	15	16	17	18		
0500	**HYDRAULIC BLOCK**																						
0501	HEAT EXCHANGER TUBE	61302004		●	●	●																	
0502	CLIP	61010012-02		●	●	●																	
0504	O-RING D: 17-4	60024164-51		●	●	●																	
0505	MOTOR - THREE-WAY VALVE	61302410		●	●	●																	
0506	PLUG	61002490		●	●	●																	
0507	O-RING D: 13.6-2.7	60024164-18		●	●	●																	
0508	PIN	61016207		●	●	●																	
0509	VALVE	61302411		●	●	●																	
0510	THERMISTOR TEMP. SENSOR	61000733		●	●	●																	
0511	TEMPERATURE SENSOR CLIP	61002083		●	●	●																	
0513	DISCONNECTOR	61312518		●	●	●																	
0514	WATER / WATER HEAT EXCHANGER 16	61302409-01		●	●	●																	
0515	SCREW CLX M 5-20	61017600		●	●	●																	
0516	CLIP	61010609		●	●	●																	
0518	LEFT HAND HYDRAULIC BLOCK	61301956		●	●	●																	
0520	FLEXIBLE PIPE	61301998		●	●	●																	
0522	CLIP	61010005		●	●	●																	
0523	O-RING D: 18.4-2.7	60024164-22		●	●	●																	
0524	O-RING D: 15.6-1.78	61009834-49		●	●	●																	
0526	O-RING D: 8.9-2.7	61009834-14		●	●	●																	
0535	PRESSURE RELIEF VALVE KIT	61400159		●	●	●																	
0536	PRESSURE RELIEF VALVE	61301927		●	●	●																	
0539	O-RING D: 8.9-1.9	60024164-13		●	●	●																	
0540	SPINDLE	61302539		●	●	●																	
0541	O-RING D: 3.6-2.4	61009834-53		●	●	●																	
0545	DIAPHRAGM	60081977		●	●	●																	
0546	O-RING D: 2.9-1.78	60024164-54		●	●	●																	
0547	GAS FILTER	60037309		●	●	●																	
0551	GAS TUBE	61302005		●	●	●																	
0553	WATER FILTER	61301924		●	●	●																	
0554	PRESSURE SENSOR 0.8b	61310364				●																	
	PLUG	61312176		●	●																		
0555	SHEET GASKET D: 8.5-4.1-1.5	60061852-12		●	●	●																	
0558	PUMP LEAD (2 SPEEDS)	61306995		●	●	●																	
0559	GASKET KIT	61304618		●	●	●																	
0560	AIR SEPARATOR HEAD ASSEMBLY	61304608		●	●	●																	
0561	RIGHT HAND HYDRAULIC BLOCK	61301936		●	●	●																	
0562	PLUG	61016752		●	●	●																	
0563	CLIP	61002406		●	●	●																	
0564	O-RING D: 24.6-3.6	61009834-30		●	●	●																	
0567	CLIP	60030898-03		●	●	●																	
0568	TAP KNOB	60066107		●	●	●																	
0569	EXCHANGER GASKET	65104334		●	●	●																	
0570	TUBE : PUMP TO HEAT EXCHANGER	61302003		●	●	●																	
0571	O-RING D: 16-1.9	61009833-37		●	●	●																	
0572	PUMP + AIR SEPARATOR 15/50	61301964		●	●	●																	
	PUMP + AIR SEPARATOR 15/60	61303461		●	●	●																	
0573	CAPACITOR	61000652-10		●	●	●																	
0575	BY-PASS	61301960		●	●	●																	
0578	O-RING D: 5.7-1.9	60024164-10		●	●	●																	
0583	CLIP	61301900		●	●	●																	
0584	NUT	61012886		●	●	●																	
0585	CLIP	61303463		●	●	●																	
0586	DISCONNECTOR TUBE	61312524		●	●	●																	
0589	NUT M 5	61016604		●	●	●																	
0590	MICRO SWITCH	61301904		●	●	●																	
0592	WATER CONTROL 8L/MN	61301952		●	●	●																	
0593	O-RING D: 20.1-1.6	60024164-58		●	●	●																	
0594	FLOW REGULATORE 8L/MN (RED)	61017288-08		●	●	●																	
0595	O-RING D: 25-2.4	60024164-32		●	●	●																	
0596	PIN	61308332		●	●	●																	
0597	GASKETS SET - HYDRAULIC BLOC	60081985		●	●	●																	

600

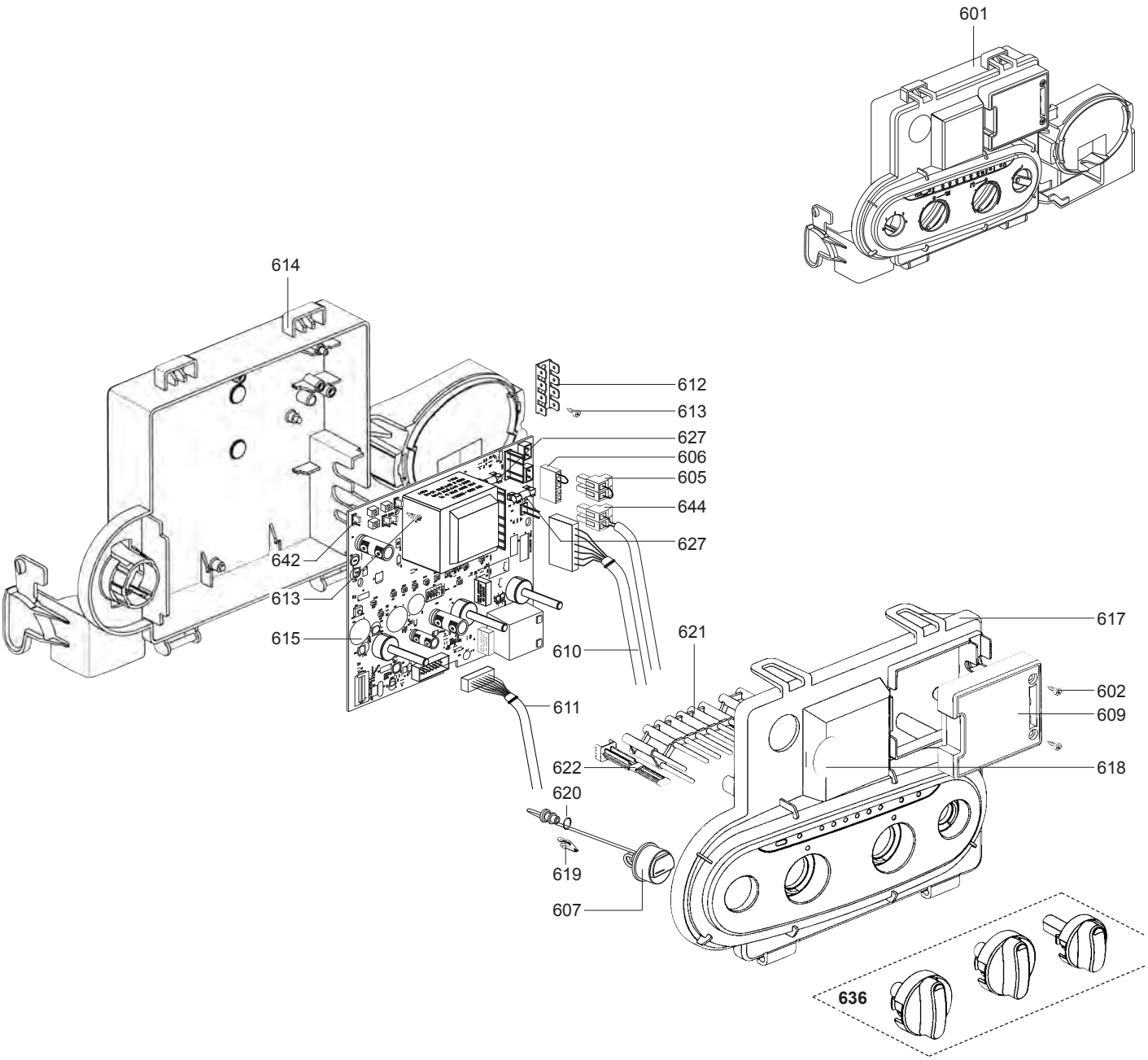

R8207350

	Description	Manf. Pt. N	Type	PRIMAXIA 24 CF	PRIMAXIA 24 VMC	PRIMAXIA 24 FF	4	5	6	7	8	9	10	11	12	13	14	15	16	17	18		
0600	**ELECTRICAL BOX**																						
0601	ELECTRICAL BOX	61305317		●	●	●																	
0602	SCREW FX90 L:16	61020510		●	●	●																	
0605	CONNECTOR	61302101		●	●	●																	
0606	CONNECTOR	61303697		●	●	●																	
0607	PRESSURE GAUGE	61303159		●	●	●																	
0609	CONNECTOR COVER	61302248		●	●	●																	
0610	FAN CABLE	61302017				●																	
	CONNECTOR	61305269		●	●																		
0611	WIRE ASSEMBLY	61302014		●																			
	WIRE ASSEMBLY	61305712				●																	
	WIRE ASSEMBLY	61312188			●																		
0612	CONNECTION STRIP	61002725		●	●	●																	
0613	TAPPING SCREW TCBL D:4 L:10	61020509		●	●	●																	
0614	BASE - BOX	61302237		●	●	●																	
0615	PRINTED CIRCUIT BOARD	60000571		●	●	●																	
0617	ELECTRICAL BOX COVER	61303266		●	●	●																	
0618	PLUG	61011316		●	●	●																	
0619	CLIP	61002406		●	●	●																	
0620	O RING D: 5.7-1.9	61009834-10		●	●	●																	
0621	TRANSMITTER OF LEDS	61302245		●	●	●																	
0622	IGNITION PUSH ROD	61302246		●	●	●																	
0627	FUSE 250V 0.125A TEMPORIZED	61000955		●	●	●																	
	FUSE 250V 2A - TEMPORIZED	61003456		●	●	●																	
	FUSE 250V 1.25A - TEMPORIZED	61003635		●	●	●																	
0636	KNOBS SET	60081979		●	●	●																	
0642	BLACK SHUNT	61400030		●	●	●																	
0644	CONNECTING TERMINAL	61308032		●	●	●																	

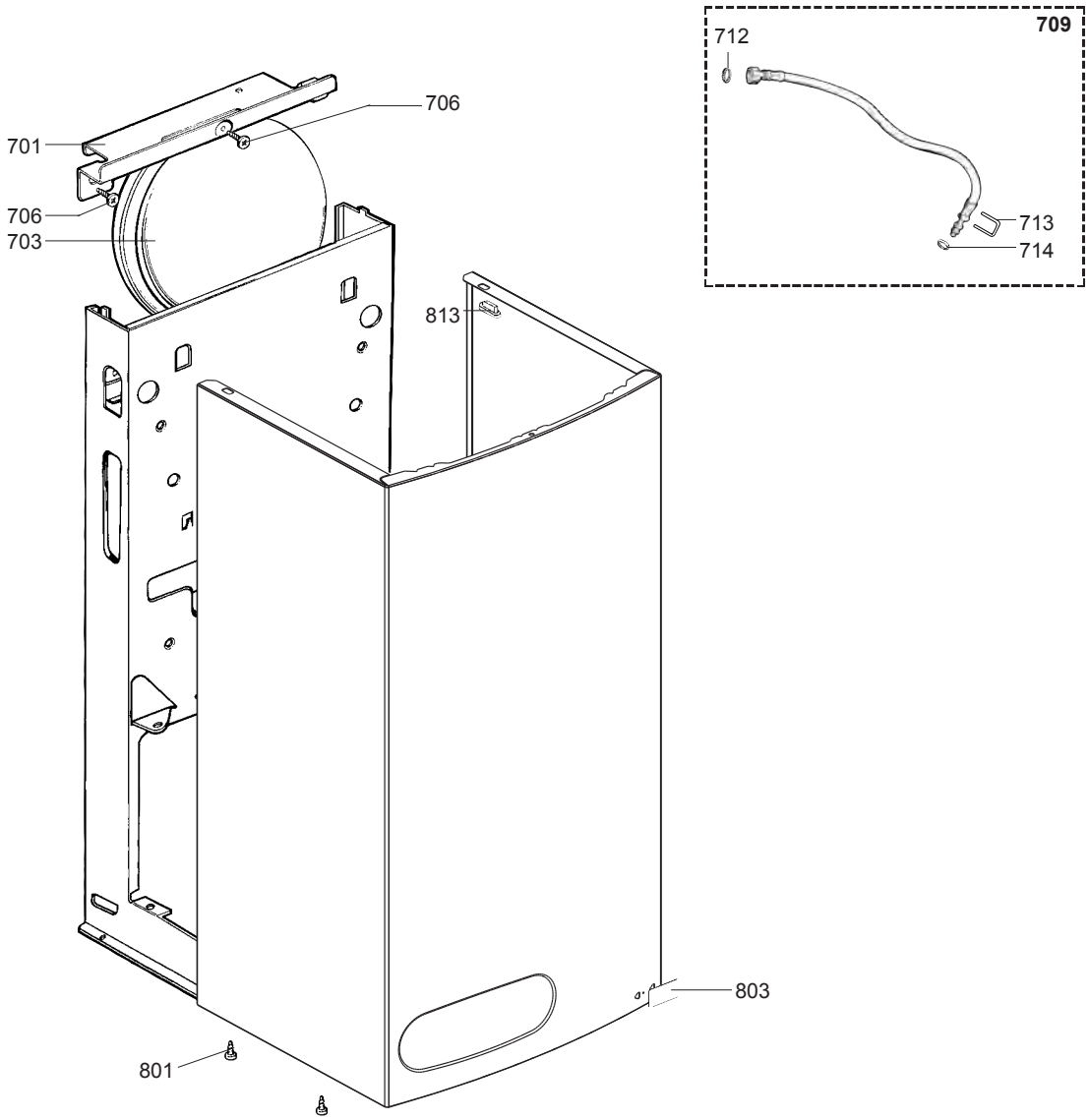
709
712
713
714
706
701
706
703
813
803
801

	Description	Manf. Pt. N	Type	PRIMAXIA 24 CF	PRIMAXIA 24 VMC	PRIMAXIA 24 FF	4	5	6	7	8	9	10	11	12	13	14	15	16	17	18	31	
				1	2	3																	
0700	**CHASSIS**																						
0701	TOP STAY PLATE	61010029		●	●	●																	
0703	EXPANSION VESSEL	60056676-06		●	●	●																	
0706	TAPPING SCREW CBLSX D: 6.3-19	61014516		●	●	●																	
0709	FLEXIBLE PIPE KIT	60081824		●	●	●																	
0712	SHEET GASKET D: 12-6-2	61308868		●	●	●																	
0713	CLIP	61010005		●	●	●																	
0714	O-RING D: 8.9-2.7	61009834-14		●	●	●																	
0800	**FRONT CASE**																						
0801	TAPPING SCREW CBLSX D: 4.2-9.5	61010125		●	●	●																	
0803	PLATE	61303654		●	●	●																	
0813	SPACER	61015797		●	●	●																	

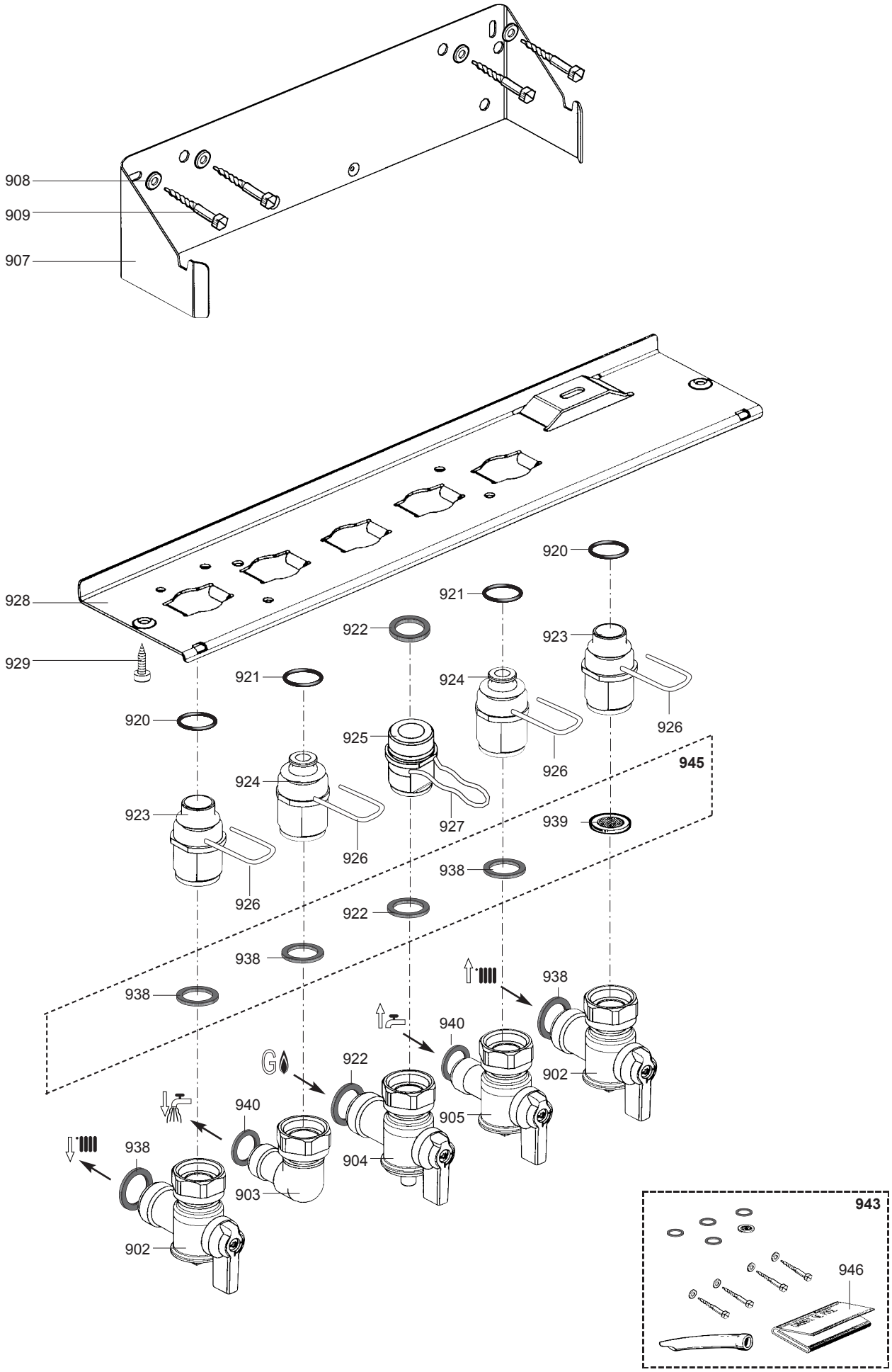
908
909
907
928
929
920
921
922
923
924
925
926
927
938
939
940
945
902
903
904
905
943
946

	Description	Manf. Pt. N	Type	PRIMAXIA 24 CF	PRIMAXIA 24 VMC	PRIMAXIA 24 FF	4	5	6	7	8	9	10	11	12	13	14	15	16	17	18	31	
				1	2	3																	
0900	**JIG PLATE & PIPE FITTING**																						
0902	WATER FLOW & RETURN SERVI. TAP	61303534		●	●	●																	
0903	HOT WATE CONNECTION	61303532		●	●	●																	
0904	GAS SERVICE TAP	61303533		●	●	●																	
0905	COLD WATER TAP	61303535		●	●	●																	
0907	HOOKING BRACKET	61012457		●	●	●																	
0908	WASHER D: 14.2-7.2-1.2	60005369-03		●	●	●																	
0909	WOOD SCREW	60025617-03		●	●	●																	
0920	O-RING D: 17-4	60024164-51		●	●	●																	
0921	O-RING D: 10.5-2.7	60024164-15		●	●	●																	
0922	SHEET GASKET D: 24-18.2-1.5	60022835-01		●	●	●																	
0923	CONNECTION	61301965		●	●	●																	
0924	CONNECTION	61302474		●	●	●																	
0925	CONNECTION	61303071		●	●	●																	
0926	PIN	61302332		●	●	●																	
0927	PIN	61305179		●	●	●																	
0928	HYDRAULIC PLATE	61301793		●	●	●																	
0929	TAPPING SCREW CBLSX D: 6.3-13	61010648		●	●	●																	
0938	SHEET GASKET D: 24-17-1.5	60061855-19		●	●	●																	
0939	WATER FILTER	60039803		●	●	●																	
0940	WASHER D: 18.4-12.2-1.5	60061855-14		●	●	●																	
0943	FITTING KIT	61312813		●	●	●																	
0945	GASKETS SET	61304273		●	●	●																	
0946	JIG PLATE	61303832		●	●	●																	

5000

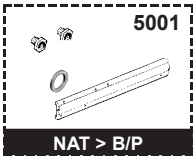

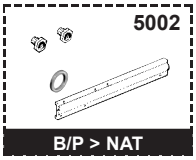

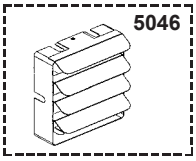

6000

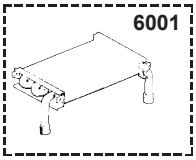

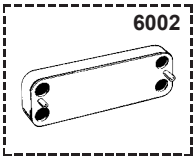

6003

Valise kit
test

	Description	Manf. Pt. N	Type	PRIMAXIA 24 CF	PRIMAXIA 24 VMC	PRIMAXIA 24 FF	4	5	6	7	8	9	10	11	12	13	14	15	16	17	18	31	
5000	**ACCESSORIES**																						
5001	CONVERSION KIT NAT > LPG	61018431		●	●	●																	
5002	CONVERSION KIT LPG > NAT	61018566		●	●																		
	CONVERSION KIT LPG > NAT	61018567				●																	
5046	DEFLECTOR 30DEG KIT	61014810				●																	
5053	D.H.W. EXPANSION VESSEL KIT	61305469		●	●	●																	
6000	**MAINTENANCE**																						
6001	DESCALING INTERFACE/HEAT EXCHA	61014100		●	●	●																	
6002	DESCALING INTERFACE/WATER EXCH	61011075		●	●	●																	
6003	FILLING TEST KIT	61305402		●	●	●																	

LIST OF THE ABBREVATIONS

HW	:	Hot water.
CW	:	Cold water.
C	:	Ceramic resistance (normal heating).
Ca	:	Ceramic resistance (accelerated heating)
TP	:	Immersion heater.
1F	:	With fittings.
2F	:	Without fittings.
3F	:	With fittings and another outlet connection.
AMI	:	With mixing valve.
SMI	:	Without mixing valve.
PUISS	:	Power of th appliance.
PN	:	Appliance with normal pression.
LP	:	Appliance with low pression.
PV	:	Appliance with variable power.
PF	:	Appliance with fixed power.

IDENTIFICATION PLATE

SERIAL NUMBER

10 Characters : 04 05 125 011

- 011 → Sequencial number
- 125 → Manufacturing day
- 05 → Year of manufacture

11 Characters : 1 95 065004 - 31

- 1 → Month of manucfacture : from 1 to 9 ➟ Jan. to Sep., O ➟ Oct., N ➟ Nov., D ➟ Dec.
- 31 → Technical number of the appliance
- 065004 → Sequencial number
- 95 → Year of manufacture

19 Characters : 08 05 0013199 900640031

- 08 → Year of manufacture
- 05 → Month of manucfacture
- 900640031 → Product reference
- 0013199 → Sequencial number

20 Characters : 3675007 XX 2 07 070 00315

- 3675007 → Product reference
- 2 → Millenium of manufacture
- 00315 → Sequencial number
- 070 → Manufacturing day
- 07 → Year of manufacture

21 Characters : 3675007 XX 07 070 0000315

- 3675007 → Product reference
- 07 → Year of manufacture
- 0000315 → Sequencial number
- 070 → Manufacturing day

The indications mentionned on the prices, commercial or technical literature and the scheme are written for your guidance and are available at a given time. The CONSTRUCTOR retains the power to modify the presentation, the form, the size, the conception or the material of the products.